SYM	REVISIONS	BY	DATE	APPD
A	1) FD 2B 330Ω WAS 75Ω 2) FD 3B 740Ω WAS 2.2K 3) FD 4B 220K WAS 150K	R	2-22-83	

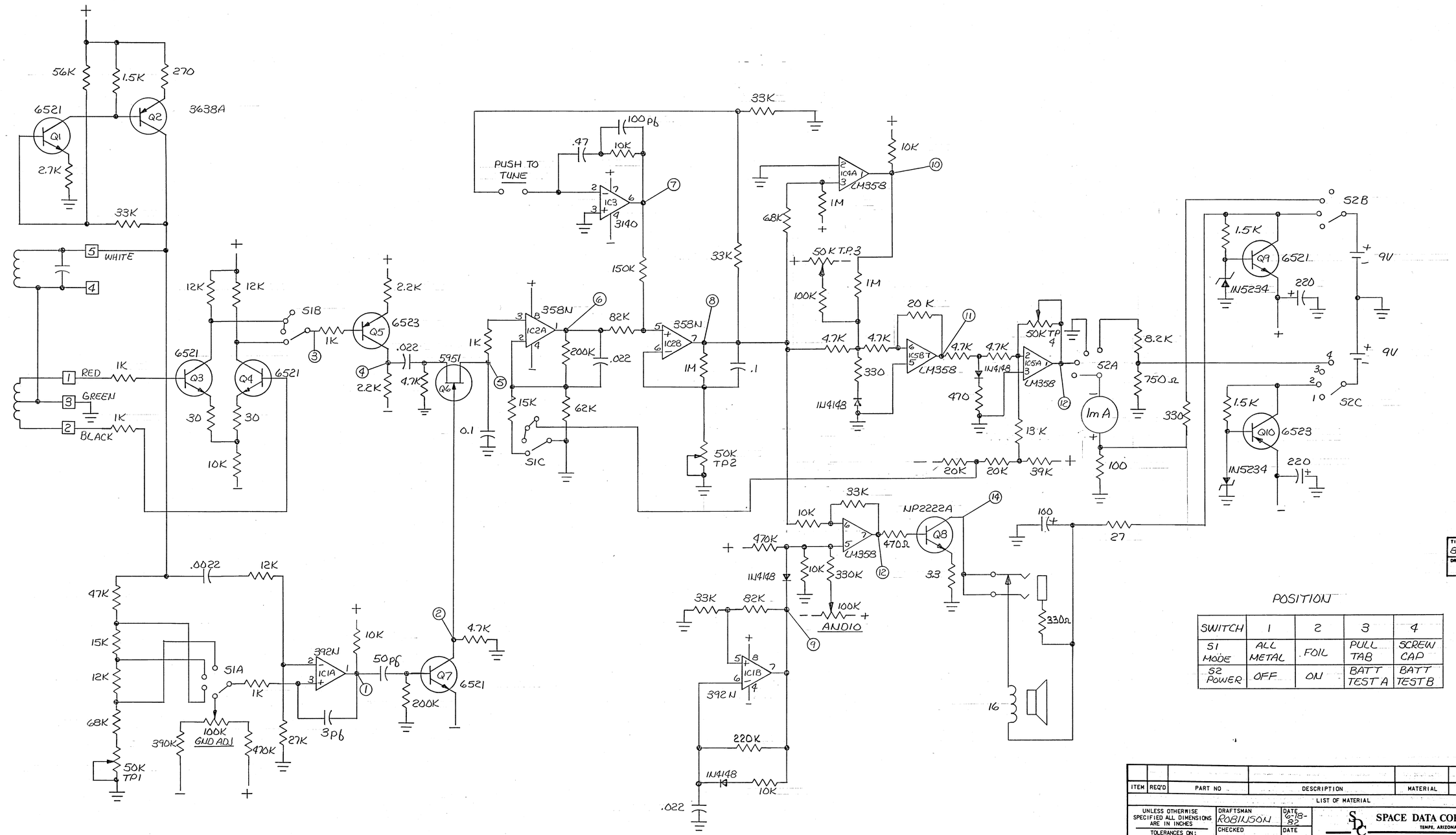

TITLE SCHEMATIC DIA. 8400 VLF/TR
DRAWING NUMBER 857-23
REV A

POSITION

SWITCH	1	2	3	4
S1 MODE	ALL METAL	FOIL	PULL TAB	SCREW CAP
S2 POWER	OFF	ON	BATT TEST A	BATT TEST B

ITEM	REQ'D	PART NO	DESCRIPTION	MATERIAL	MAT'L SPEC	CODE IDENT	NOTE

LIST OF MATERIAL

857-		
NEXT ASSY	FINAL ASSY	NEXT ASSY	FINAL ASSY
APPLICATION		QTY REQ'D	

UNLESS OTHERWISE SPECIFIED ALL DIMENSIONS ARE IN INCHES
TOLERANCES ON:
FRACTIONS ± .03
2 PLACE DECIMALS ± .02
3 PLACE DECIMALS ± .010
ANGLE ± 0°-30'
DIMENSION APPLY AFTER PLATING:
REMOVE BURRS .005 TO .015 IN.
HEAT TREAT
SURFACE ROUGHNESS
√ UNLESS SPECIFIED

DRAFTSMAN ROBINSON DATE 6-18-82
CHECKED DATE
APP'D DATE
APP'D DATE
APP'D DATE
REMARKS:

SPACE DATA CORPORATION
TEMPE, ARIZONA

TITLE SCHEMATIC DIAGRAM 8400 VLF/TR

CODE IDENT	SIZE	DRAWING NO	REV
27555	D	857-23	A

SCALE WT SHEET OF