SYM	REVISIONS	BY	DATE	APPD
A	ADDED NOTE 2.	CM	11-22-82	

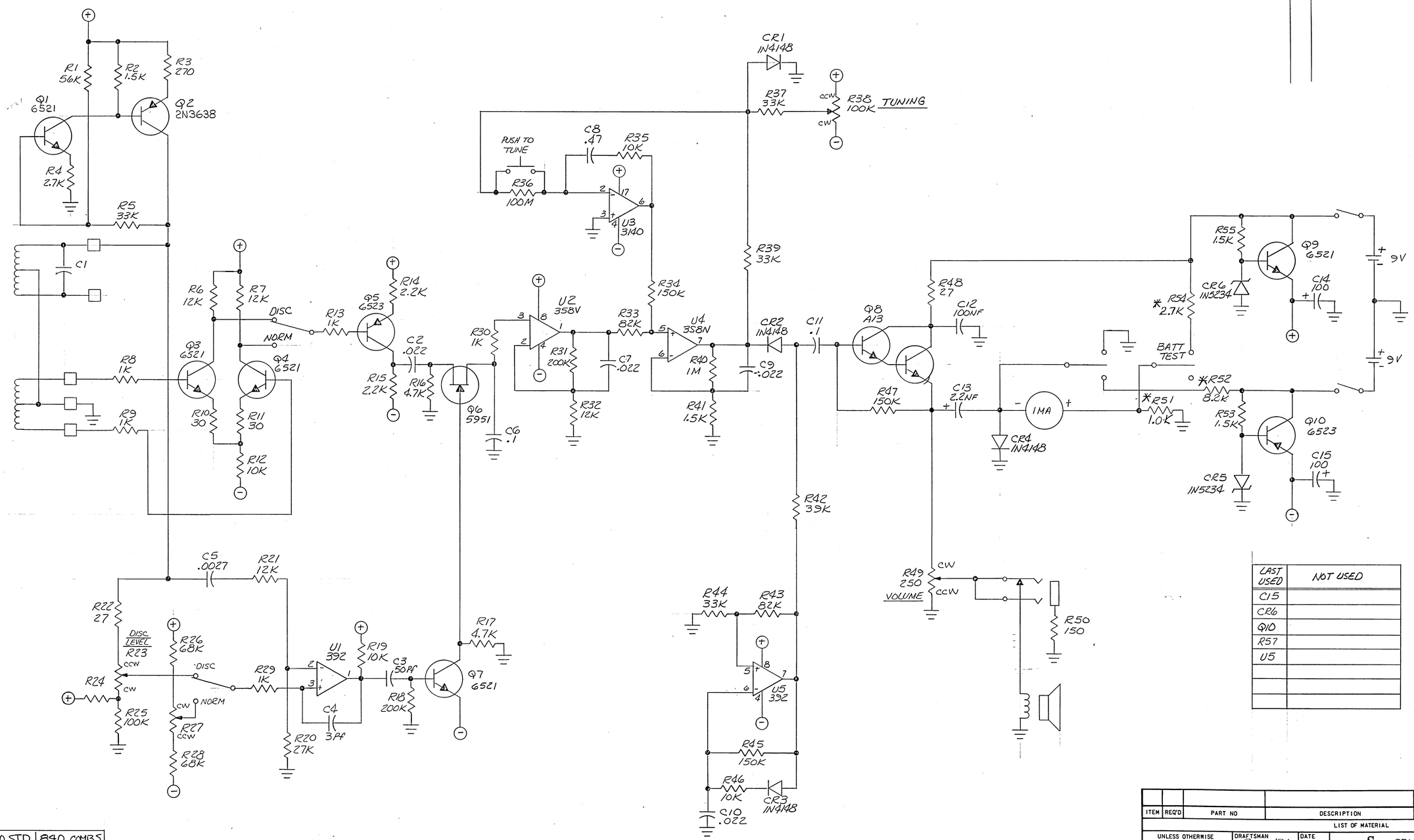

LAST USED	NOT USED
C15	
CR6	
Q10	
R57	
U5	

TITLE SCH DIAG MODEL 840VLF/TR
DRAWING NUMBER 857-10
REV A

2.

840 STD	840 COMBS
100M	REMOVED
2.7K	8.2K
1.0K	3.6K
8.2K	5.6K

1. UNLESS OTHERWISE SPECIFIED, ALL RESISTORS 5%, 1/4W.

NOTES:

ITEM	REQ'D	PART NO	DESCRIPTION	MATERIAL	MAT'L SPEC	CODE IDENT	NOTE

LIST OF MATERIAL

857-1			
NEXT ASSY	FINAL ASSY	NEXT ASSY	FINAL ASSY
APPLICATION		QTY REQ'D	

UNLESS OTHERWISE SPECIFIED ALL DIMENSIONS ARE IN INCHES
TOLERANCES ON:
FRACTIONS ± .03
2 PLACE DECIMALS ± .02
3 PLACE DECIMALS ± .010
ANGLE ± 0°-30'
DIMENSION APPLY AFTER PLATING:
REMOVE BURRS .005 TO .015 IN.
HEAT TREAT
SURFACE ROUGHNESS
√ UNLESS SPECIFIED

DRAFTSMAN BOSTHBI DATE 4-16-82
CHECKED DATE
APP'D DATE
APP'D DATE
APP'D DATE
REMARKS:

SPACE DATA CORPORATION
TEMPE, ARIZONA

TITLE SCHEMATIC DIAGRAM MODEL 840 VLF/TR

CODE IDENT 27555 | SIZE D | DRAWING NO 857-10 | REV A
SCALE —— | WT | SHEET / OF /