| SYM | REVISIONS | BY | DATE | APPD |
|---|---|---|---|---|

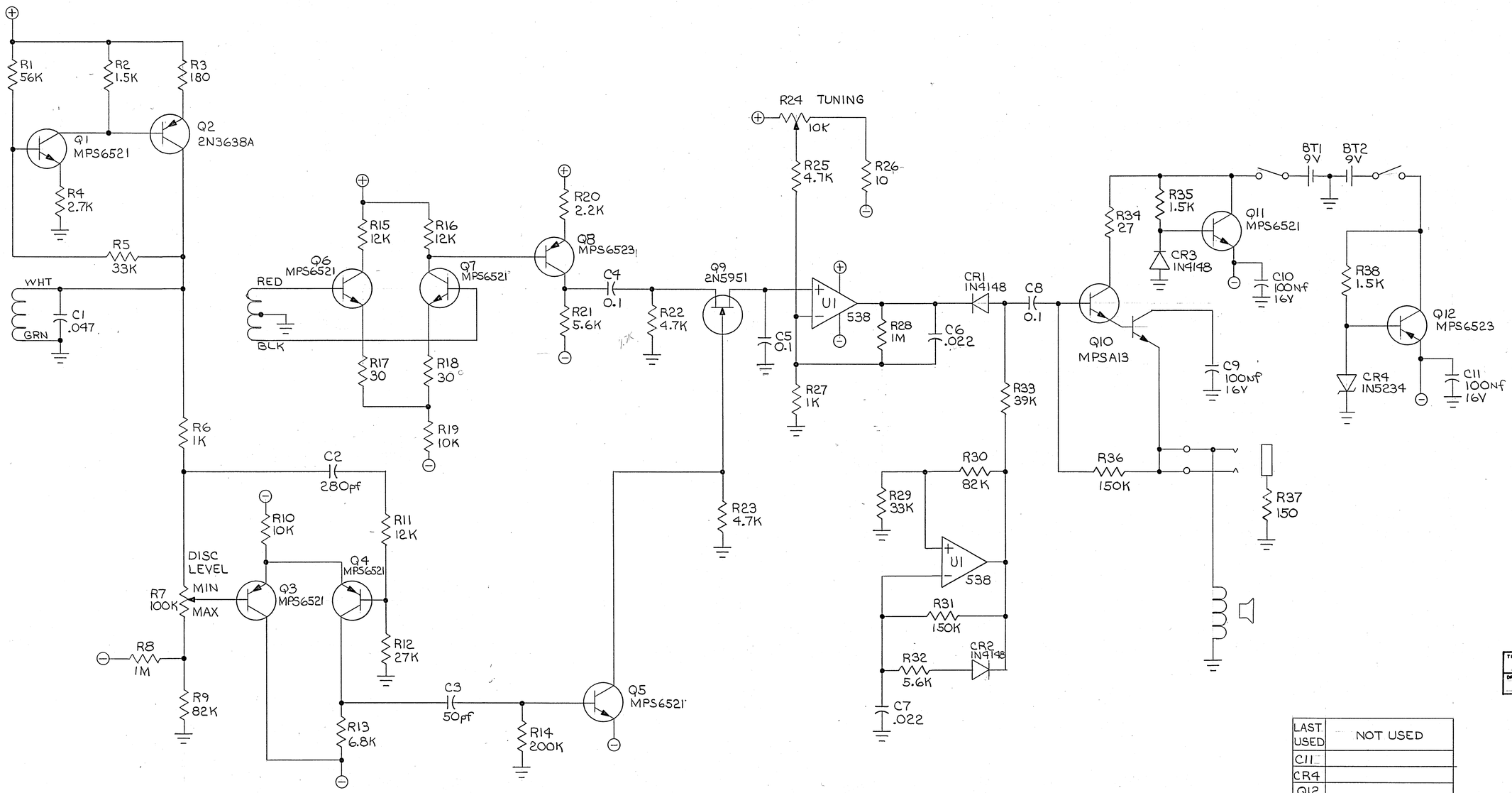


| LAST USED | NOT USED |
|---|---|
| C11 | |
| CR4 | |
| Q12 | |
| R37 | |
| U1 | |
| | |

TITLE SCHEMATIC DIA BANDIT
DRAWING NUMBER 857-160
REV –

1. UNLESS OTHERWISE SPECIFIED:
ALL RESISTANCE IS IN OHMS & 1/4W, 5%.
ALL CAPACITANCE IS IN MICROFARADS.

NOTES:

| ITEM | REQ'D | PART NO | DESCRIPTION | MATERIAL | MAT'L SPEC | CODE IDENT | NOTE |
|---|---|---|---|---|---|---|---|

LIST OF MATERIAL

| NEXT ASSY | FINAL ASSY | NEXT ASSY | FINAL ASSY |
|---|---|---|---|
| 857-151 | | REF | |

APPLICATION — QTY REQ'D

UNLESS OTHERWISE SPECIFIED ALL DIMENSIONS ARE IN INCHES
TOLERANCES ON:
FRACTIONS ± .03
2 PLACE DECIMALS ± .02
3 PLACE DECIMALS ± .010
ANGLE ± 0°-30'
DIMENSION APPLY AFTER PLATING:
REMOVE BURRS .005 TO .015 IN.
HEAT TREAT
SURFACE ROUGHNESS
√UNLESS SPECIFIED

DRAFTSMAN Romaver DATE 6-20-80
CHECKED DATE
APP'D DATE
APP'D DATE
APP'D DATE
REMARKS:

SPACE DATA CORPORATION
TEMPE, ARIZONA

TITLE SCHEMATIC DIAGRAM BANDIT

CODE IDENT 27555 | SIZE D | DRAWING NO 857-160 | REV –
SCALE ~ | WT | SHEET OF