SYM	REVISIONS	BY	DATE	APPD

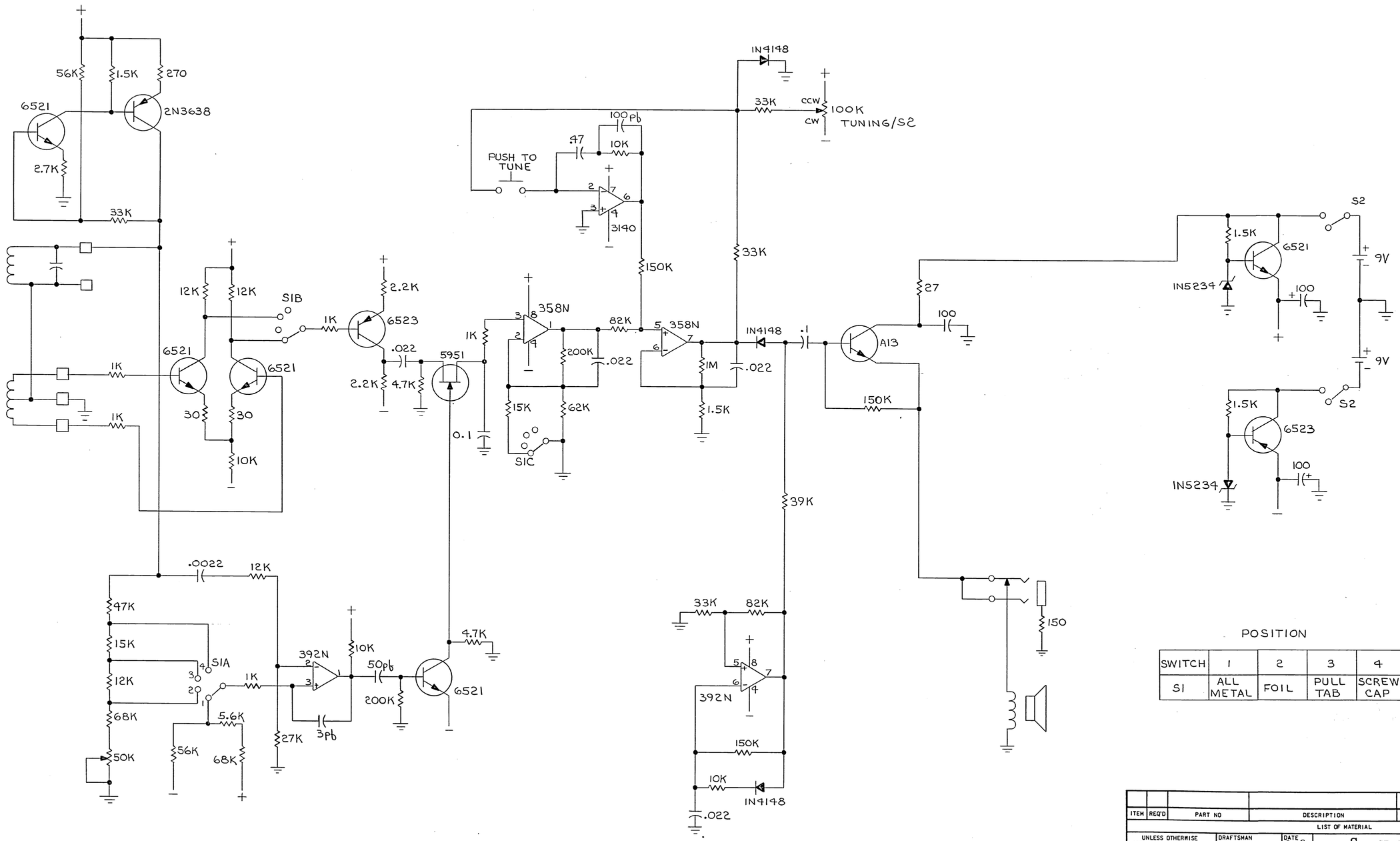

POSITION

SWITCH	1	2	3	4
S1	ALL METAL	FOIL	PULL TAB	SCREW CAP

TITLE SCHEMATIC MARAUDER V
DRAWING NUMBER 857-420
REV –

ITEM	REQ'D	PART NO	DESCRIPTION	MATERIAL	MAT'L SPEC	CODE IDENT	NOTE

LIST OF MATERIAL

857-418			
NEXT ASSY	FINAL ASSY	NEXT ASSY	FINAL ASSY
APPLICATION		QTY REQ'D	

UNLESS OTHERWISE SPECIFIED ALL DIMENSIONS ARE IN INCHES
TOLERANCES ON:
FRACTIONS ± .03
2 PLACE DECIMALS ± .02
3 PLACE DECIMALS ± .010
ANGLE ± 0°-30'
DIMENSION APPLY AFTER PLATING:
REMOVE BURRS .005 TO .015 IN.
HEAT TREAT
SURFACE ROUGHNESS
√ UNLESS SPECIFIED

DRAFTSMAN C. MARTIN	DATE 8-18-82	
CHECKED	DATE	
APP'D	DATE	
APP'D	DATE	
APP'D	DATE	
REMARKS:		

SPACE DATA CORPORATION
TEMPE, ARIZONA

TITLE
SCHEMATIC DIAGRAM
MARAUDER V

CODE IDENT	SIZE	DRAWING NO	REV
27555	D	857-420	–
SCALE	WT	SHEET OF	