| SYM | REVISIONS | BY | DATE | APPD |
|---|---|---|---|---|

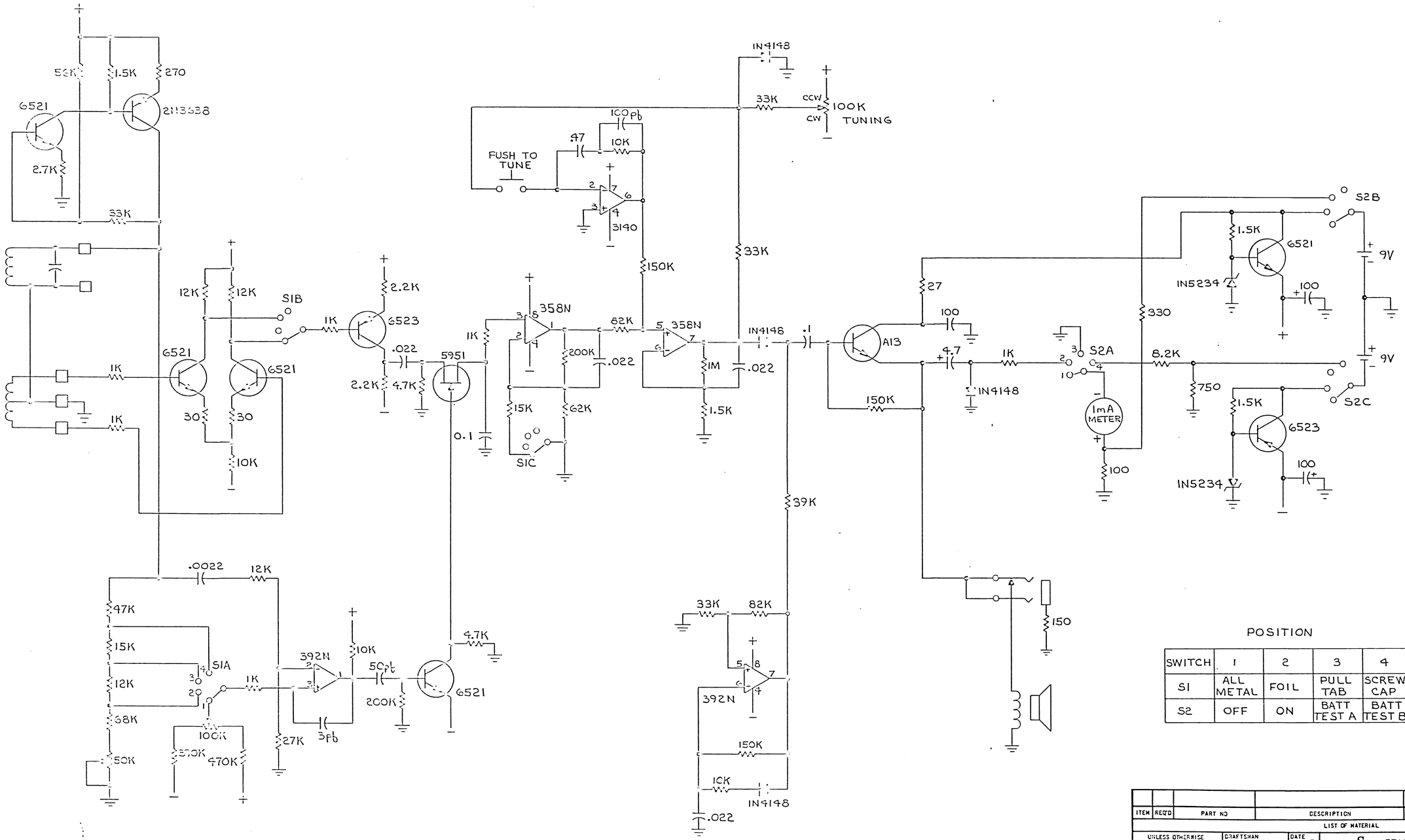


POSITION

| SWITCH | 1 | 2 | 3 | 4 |
|---|---|---|---|---|
| S1 | ALL METAL | FOIL | PULL TAB | SCREW CAP |
| S2 | OFF | ON | BATT TEST A | BATT TEST B |

TITLE SCHEMATIC MARAUDER XV

DRAWING NUMBER 857-416

REV –

| ITEM | REQ'D | PART NO | DESCRIPTION | MATERIAL | MAT'L SPEC | CODE IDENT | NOTE |
|---|---|---|---|---|---|---|---|

LIST OF MATERIAL

UNLESS OTHERWISE SPECIFIED ALL DIMENSIONS ARE IN INCHES

TOLERANCES ON:
FRACTIONS ± .03
2 PLACE DECIMALS ± .02
3 PLACE DECIMALS ± .010
ANGLE ± 0°-30'

DIMENSION APPLY AFTER PLATING:
REMOVE BURRS .005 TO .015 IN.
HEAT TREAT
SURFACE ROUGHNESS √ UNLESS SPECIFIED

DRAFTSMAN C. MARTIN DATE 3-23-82
CHECKED DATE
APP'D DATE
APP'D DATE
APP'D DATE
REMARKS:

SPACE DATA CORPORATION
TEMPE, ARIZONA

TITLE SCHEMATIC DIAGRAM MARAUDER XV

| CODE IDENT | SIZE | DRAWING NO | REV |
|---|---|---|---|
| 27555 | D | 857-416 | – |

SCALE WT SHEET OF

| | | | |
|---|---|---|---|
| 857-414 | | | |
| NEXT ASSY | FINAL ASSY | NEXT ASSY | FINAL ASSY |
| APPLICATION | | QTY REQ'D | |