SYM	REVISIONS	BY	DATE	APPD
A	UPDATED	D.L.	9-27-83	

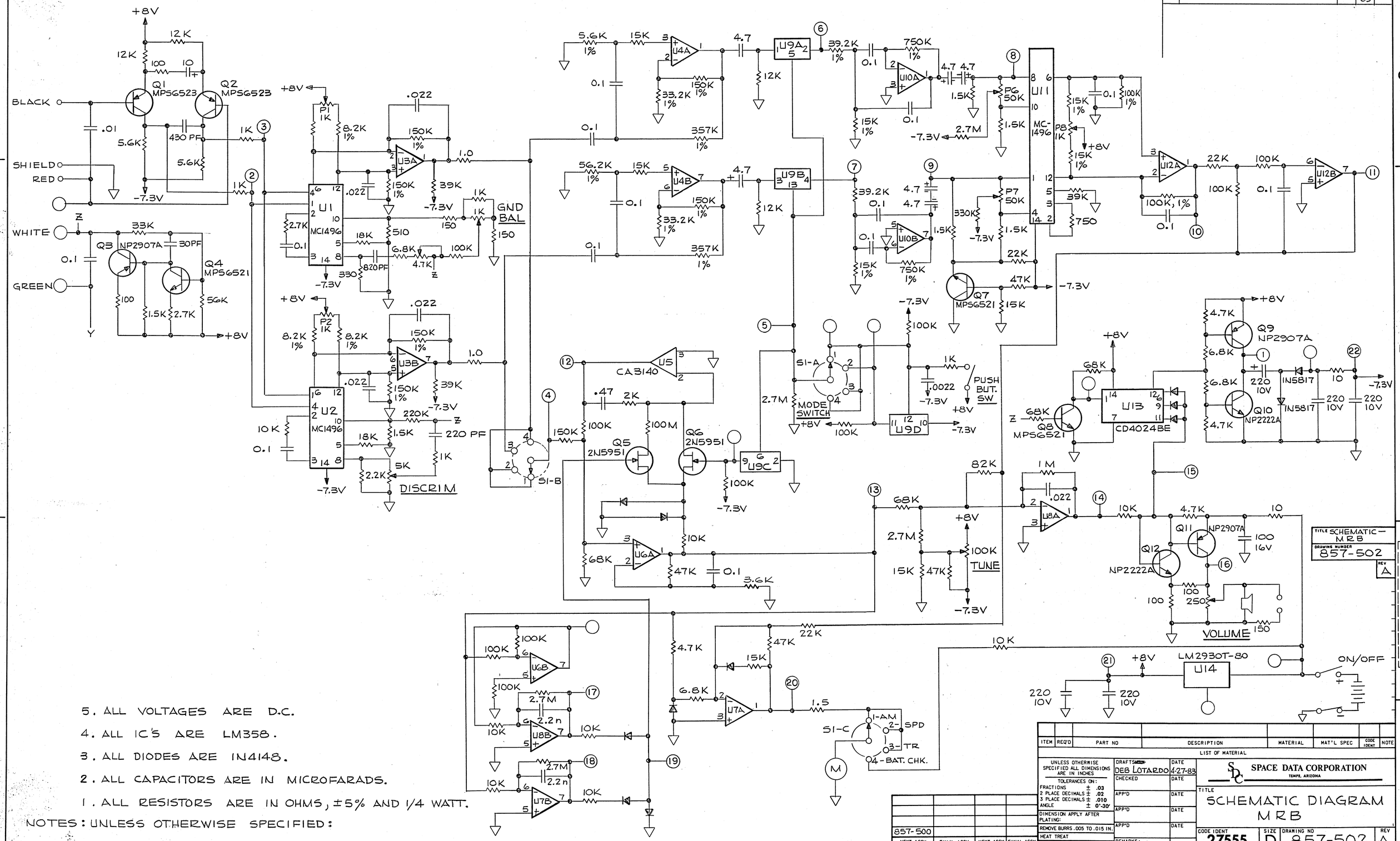

5. ALL VOLTAGES ARE D.C.
4. ALL IC'S ARE LM358.
3. ALL DIODES ARE IN4148.
2. ALL CAPACITORS ARE IN MICROFARADS.
1. ALL RESISTORS ARE IN OHMS, ±5% AND 1/4 WATT.

NOTES: UNLESS OTHERWISE SPECIFIED:

ITEM	REQ'D	PART NO	DESCRIPTION	MATERIAL	MAT'L SPEC	CODE IDENT	NOTE

LIST OF MATERIAL

857-500			
NEXT ASSY	FINAL ASSY	NEXT ASSY	FINAL ASSY
APPLICATION		QTY REQ'D	

UNLESS OTHERWISE SPECIFIED ALL DIMENSIONS ARE IN INCHES
TOLERANCES ON:
FRACTIONS ± .03
2 PLACE DECIMALS ± .02
3 PLACE DECIMALS ± .010
ANGLE ± 0°-30'
DIMENSION APPLY AFTER PLATING:
REMOVE BURRS .005 TO .015 IN.
HEAT TREAT
SURFACE ROUGHNESS
√ UNLESS SPECIFIED

DRAFTS DEB LOTARDO	DATE 4-27-83	SPACE DATA CORPORATION TEMPE, ARIZONA
CHECKED	DATE	
APP'D	DATE	TITLE SCHEMATIC DIAGRAM MRB
APP'D	DATE	
APP'D	DATE	CODE IDENT 27555 · SIZE D · DRAWING NO 857-502 · REV A
REMARKS:		SCALE NONE · WT · SHEET 1 OF 1

TITLE SCHEMATIC — MRB
DRAWING NUMBER 857-502 REV A