SYM	REVISIONS	BY	DATE	APPD

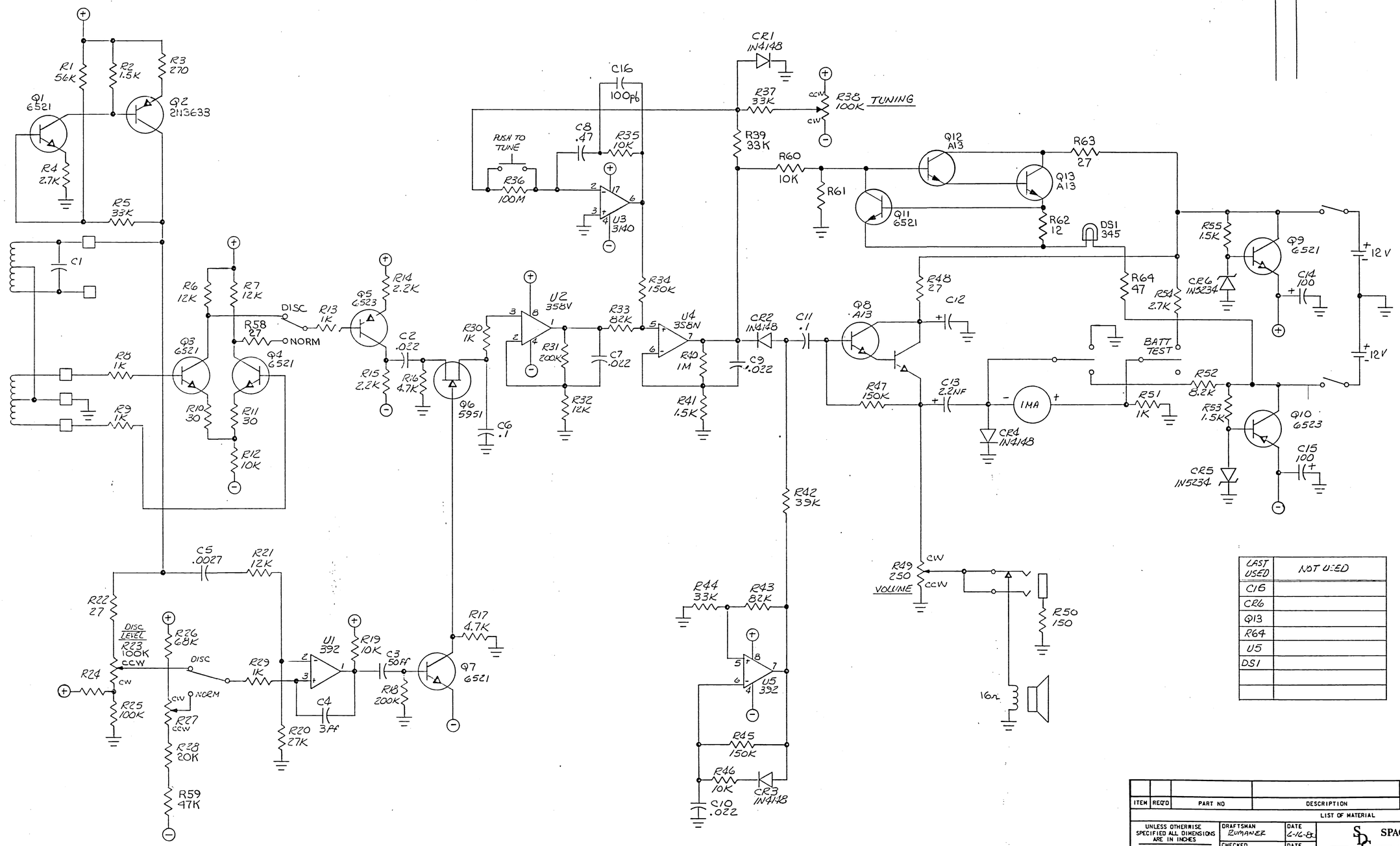

LAST USED	NOT USED
C16	
CR6	
Q13	
R64	
U5	
DS1	

TITLE SCH DIAG. OUTLAW, DE-280
DRAWING NUMBER 857-40
REV –

NOTES:
1. UNLESS OTHERWISE SPECIFIED, ALL RESISTORS 5%, 1/4W.

ITEM	REQ'D	PART NO	DESCRIPTION	MATERIAL	MAT'L SPEC	CODE IDENT	NOTE

LIST OF MATERIAL

UNLESS OTHERWISE SPECIFIED ALL DIMENSIONS ARE IN INCHES
TOLERANCES ON:
FRACTIONS ± .03
2 PLACE DECIMALS ± .02
3 PLACE DECIMALS ± .010
ANGLE ± 0°-30'
DIMENSION APPLY AFTER PLATING:
REMOVE BURRS .005 TO .015 IN.
HEAT TREAT
SURFACE ROUGHNESS
√UNLESS SPECIFIED

DRAFTSMAN RUMANER DATE 2-16-8
CHECKED DATE
APP'D DATE
APP'D DATE
APP'D DATE
REMARKS:

SPACE DATA CORPORATION
TEMPE, ARIZONA

TITLE SCHEMATIC DIAGRAM OUTLAW DE-280

CODE IDENT 27555 | SIZE D | DRAWING NO 857-40 | REV –
SCALE — | WT | SHEET / OF /

NEXT ASSY	FINAL ASSY	NEXT ASSY	FINAL ASSY
857-31		REF	

APPLICATION | QTY REQ'D