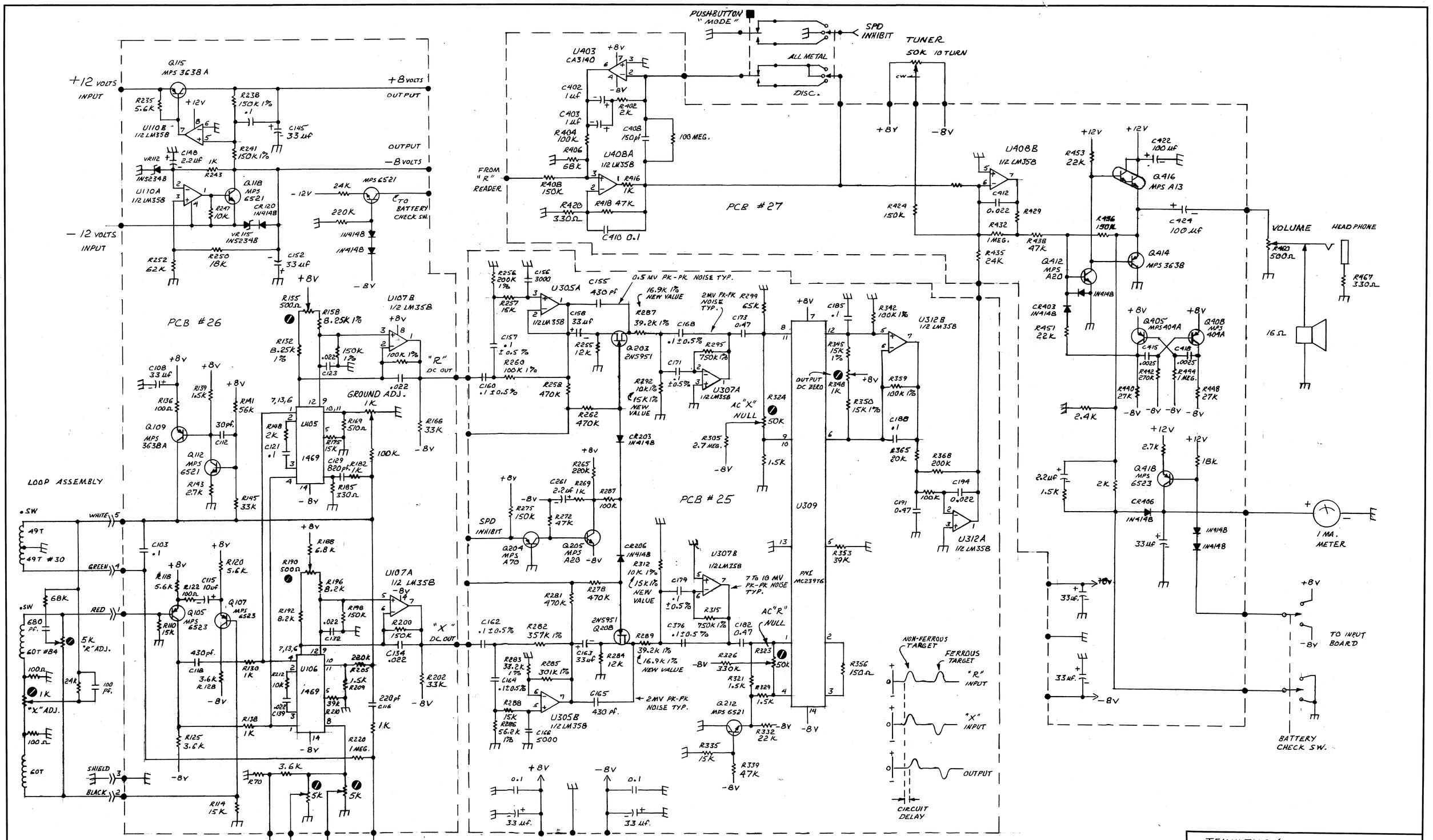

OWNERSHIP - PROPRIETARY DATA LEGEND
This document and the information contained herein are the proprietary property of Teknetics Inc., Lebanon, Oregon. Recipiens of this document agree that the information contained herein will only be used for purposes of engineering evaluation or repair and for no other purposes, without the prior express written permission of Teknetics, Inc. Recipients further agree not to reproduce or copy this document either in whole or in part without the prior express written permission of Teknetics, and to promptly return this document to Teknetics upon the receipt of a written request therefore.

TEKNETICS / BOUNTY HUNTER

SCALE: NONE	APPROVED BY:	DRAWN BY RVG
DATE: —		REVISED —

RB 5 SCHEMATIC

DRAWING NUMBER

22 X 34 PRINTED ON NO. 1000H CLEARPRINT ®