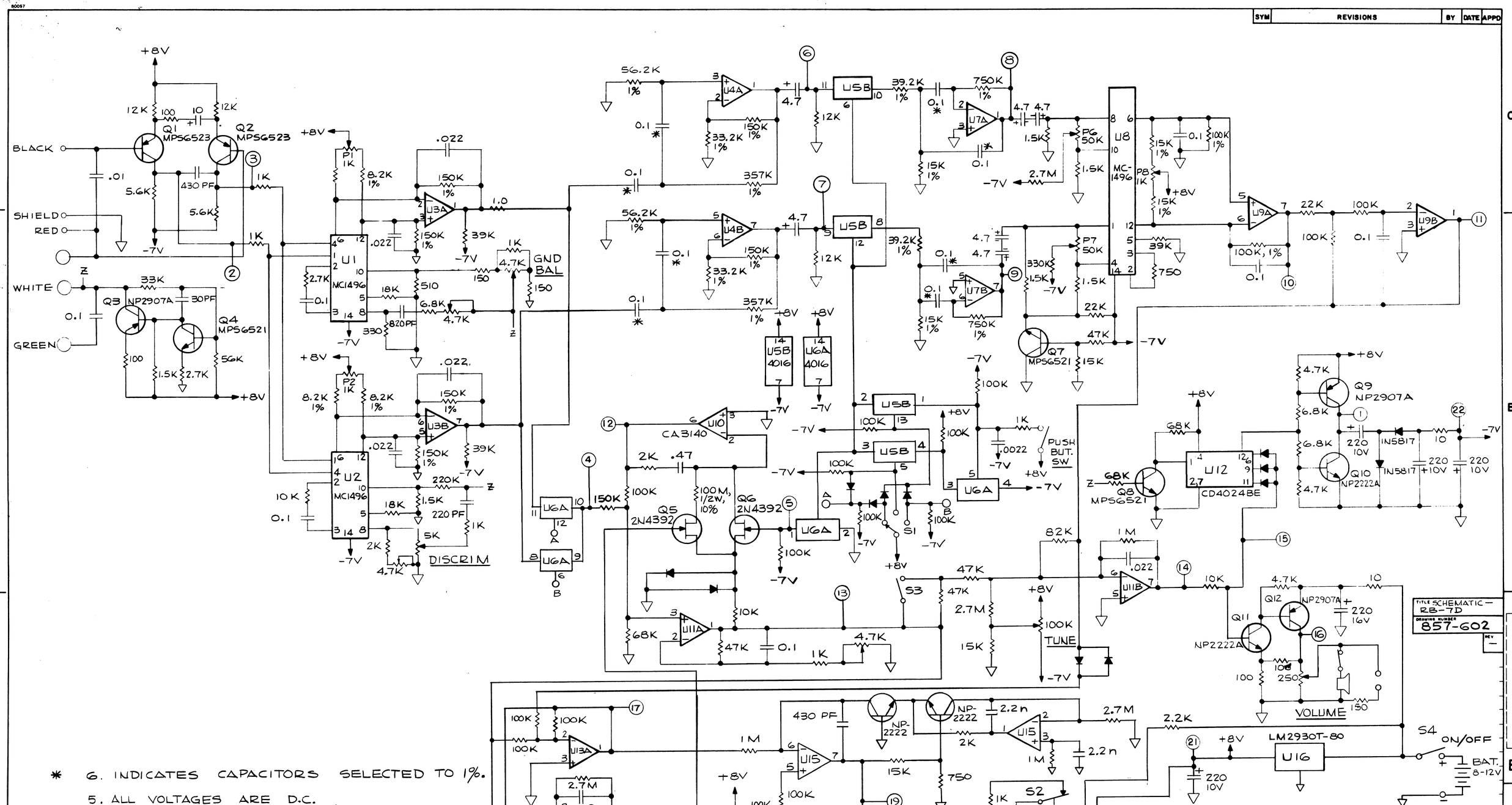

* 6. INDICATES CAPACITORS SELECTED TO 1%.

5. ALL VOLTAGES ARE D.C.

4. ALL IC'S ARE LM358.

3. ALL DIODES ARE 1N4148.

2. ALL CAPACITORS ARE IN MICROFARADS.

1. ALL RESISTORS ARE IN OHMS, ±5% AND 1/4 WATT.

NOTES: UNLESS OTHERWISE SPECIFIED:

SYM	REVISIONS	BY	DATE	APPD

ITEM	REQ'D	PART NO	DESCRIPTION	MATERIAL	MAT'L SPEC	CODE IDENT	NOTE

LIST OF MATERIAL

NEXT ASSY	FINAL ASSY	NEXT ASSY	FINAL ASSY
857-600			
APPLICATION		QTY REQ'D	

UNLESS OTHERWISE SPECIFIED ALL DIMENSIONS ARE IN INCHES

TOLERANCES ON:
FRACTIONS ± .03
2 PLACE DECIMALS ± .02
3 PLACE DECIMALS ± .010
ANGLE ± 0°-30'

DIMENSION APPLY AFTER PLATING:
REMOVE BURRS .005 TO .015 IN.
HEAT TREAT
SURFACE ROUGHNESS √ UNLESS SPECIFIED

DRAFTS DEB LOTARDO DATE 8/24/83
CHECKED DATE 8/25/83
APP'D DATE
APP'D DATE
APP'D DATE
REMARKS:

SPACE DATA CORPORATION
TEMPE, ARIZONA

TITLE
SCHEMATIC DIAGRAM
RB-7D (060)

CODE IDENT	SIZE	DRAWING NO	REV
27555	D	857-602	—

SCALE NONE WT SHEET 1 OF 1