SYM	REVISIONS	BY	DATE	APPD

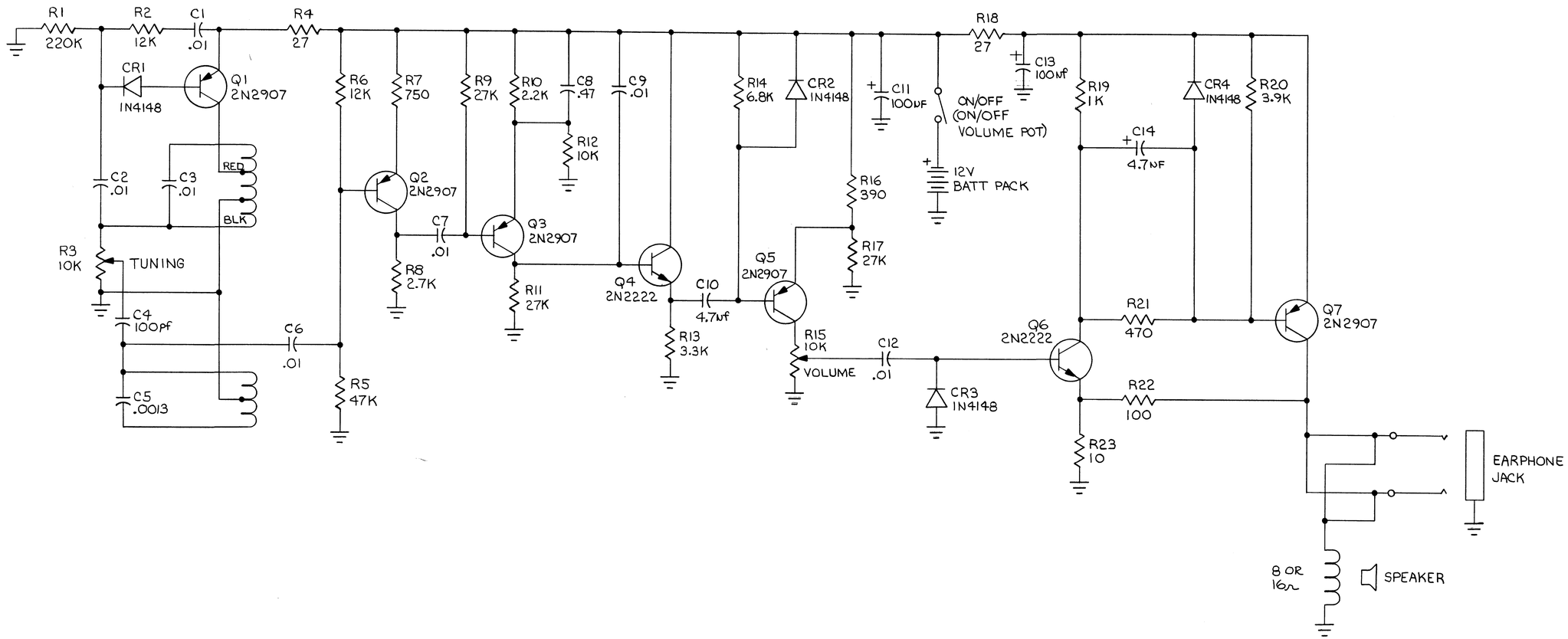

LAST USED	NOT USED
C14	
CR4	
Q7	
R23	

1. UNLESS OTHERWISE SPECIFIED:
   ALL RESISTANCE VALUES ARE IN OHMS, 1/4W, 5%.
   ALL CAPACITANCE VALUES ARE IN MICROFARADS.

NOTES:

ITEM	REQ'D	PART NO	DESCRIPTION	MATERIAL	MAT'L SPEC	CODE IDENT	NOTE

LIST OF MATERIAL

857-181		REF	
NEXT ASSY	FINAL ASSY	NEXT ASSY	FINAL ASSY
APPLICATION		QTY REQ'D	

UNLESS OTHERWISE SPECIFIED ALL DIMENSIONS ARE IN INCHES
TOLERANCES ON:
FRACTIONS ± .03
2 PLACE DECIMALS ± .02
3 PLACE DECIMALS ± .010
ANGLE ± 0°-30'
DIMENSION APPLY AFTER PLATING:
REMOVE BURRS .005 TO .015 IN.
HEAT TREAT
SURFACE ROUGHNESS
√ UNLESS SPECIFIED

DRAFTSMAN	ROMADER	DATE 4-29-80
CHECKED		DATE
APP'D		DATE
APP'D		DATE
APP'D		DATE
REMARKS:		

SPACE DATA CORPORATION
TEMPE, ARIZONA

TITLE
SCHEMATIC DIAGRAM
TR 500

CODE IDENT	SIZE	DRAWING NO	REV
27555	D	857-190	–
SCALE	WT	SHEET OF	

TITLE SCHEMATIC TR 500
DRAWING NUMBER 857-190
REV –