SYM	REVISIONS	BY	DATE	APPD
A	UPDATED	CR	8-26-80	

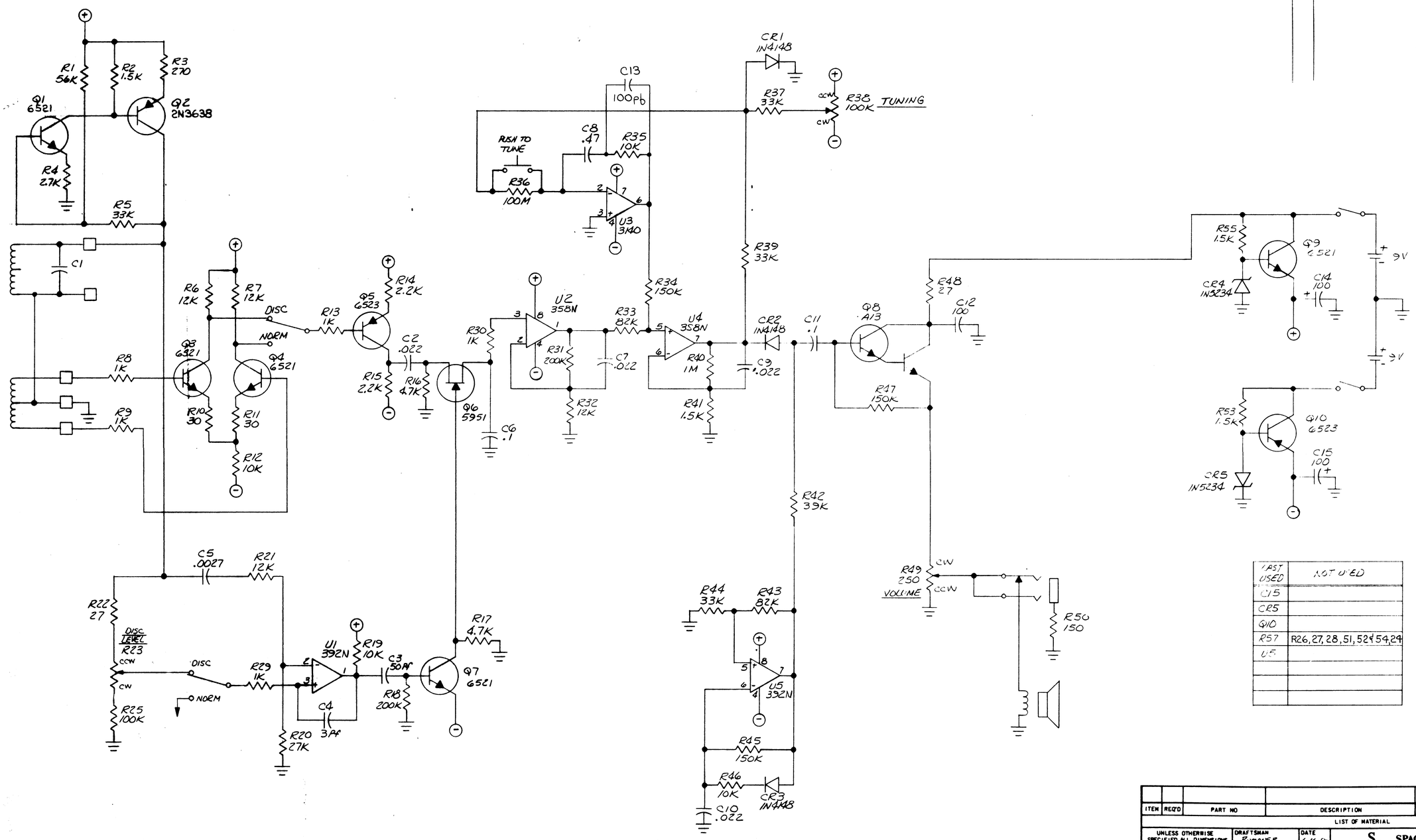

LAST USED	NOT USED
C15	
CR5	
Q10	
R57	R26, 27, 28, 51, 52, 54, 29
U5	

TITLE SCH DIAG MODEL TR550-D
DRAWING NUMBER 857-70
REV —

NOTES:
1. UNLESS OTHERWISE SPECIFIED, ALL RESISTORS 5%, 1/4W.

ITEM	REQ'D	PART NO	DESCRIPTION	MATERIAL	MAT'L SPEC	CODE IDENT	NOTE

LIST OF MATERIAL

NEXT ASSY	FINAL ASSY	NEXT ASSY	FINAL ASSY
857-61			
APPLICATION		QTY REQ'D	

UNLESS OTHERWISE SPECIFIED ALL DIMENSIONS ARE IN INCHES
TOLERANCES ON:
FRACTIONS ± .03
2 PLACE DECIMALS ± .02
3 PLACE DECIMALS ± .010
ANGLE ± 0°-30'
DIMENSION APPLY AFTER PLATING:
REMOVE BURRS .005 TO .015 IN.
HEAT TREAT
SURFACE ROUGHNESS
√ UNLESS SPECIFIED

		DATE
DRAFTSMAN	RUMAKER	6-16-80
CHECKED		DATE
APP'D		DATE
APP'D		DATE
APP'D		DATE
REMARKS:		

SPACE DATA CORPORATION
TEMPE, ARIZONA

TITLE SCHEMATIC DIAGRAM MODEL TR550D

CODE IDENT	SIZE	DRAWING NO	REV
27555	D	857-70	—
SCALE —	WT	SHEET / OF /	